POLARIS

BODY, HOOD - Z26NMY99A4/B4/A6/B6 (C750923)

2026 RZR - RZR XP S 4 1000 ULTIMATE (R01) - Z26NMY99A4/B4/A6/B6

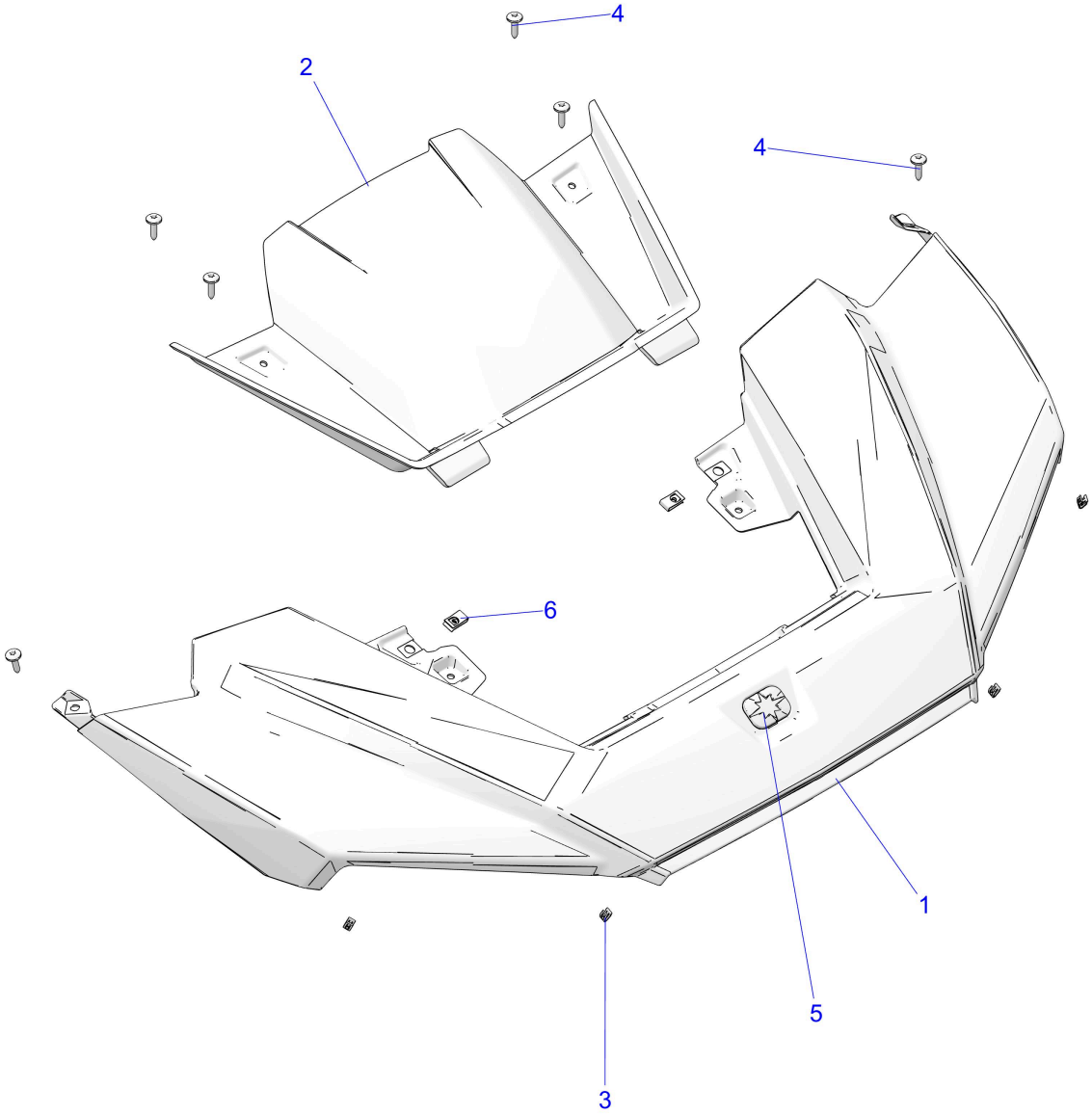

© 2025 Polaris Industries Inc.

C750923

Reference #	*Part#*	*Description*	*Quantity*
1	5466951-804	PANEL-HOOD,FRT,MIC,STEALTH GR [A4/B4][STEALTH GRAY NON-METALLIC]	1
1	5466951-902	PANEL-HOOD,FRT,MIC,SAND DUNE [A6/B6][SAND DUNE NON-METALLIC]	1
2	5456528-070	HOOD CENTER,BLK	1
3	5456313	CLIP-TRIM, PLASTIC, WHITE	4
4	7519650	SCR-TXTH-M6X1.0X25 ZFB	AR
5	2638610	ASM-BADGE-POLARIS STAR LG,NFC [TO 12.2.2025]	1
5	5270256	BADGE-POLARIS STAR LG [FROM 12.2.2025]	1
6	7081305	CLIP-U SPEED NUT	2

Copyright 1996-2026 Polaris Industries U.S.A All rights reserved.